









Elbow 90° long

3,40€ – 7,30€ VAT incl

SKU: MCFF0121100W1

https://www.mc-fact.eu/en/shop/fittings/elbows/elbow-90-long/

Standard 90° long-radius plumbing elbow fitting, female/female, made of cast iron, available in 4 versions.

Features

Weight	N/A
Dimensions	N/A
Use	Decoration, Plumbing
Type of thread	BSPT Whitworth Conical
Size	3/8", 1/2", 3/4", 1"
Certified	DVGW, SVGW
Materials	Cast iron
range	Classic, Cast iron

Technical Drawing

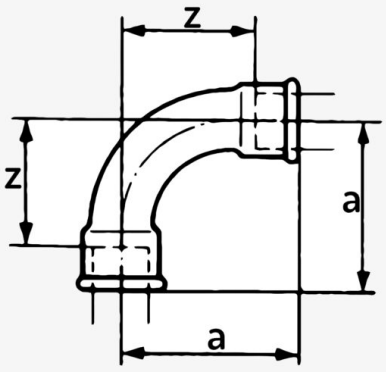

MC Fact (mm)	a	z
3/8" (12/17)	48	37
1/2" (15/21)	55	42
3/4" (20/27)	69	54
1" (26/34)	85	68

Copyright 2026 MC Fact - All rights reserved

	Long 90° Elbow – 3/8″ SKU: MCFF0121138W1	60 × 60 × 25 mm	79,00 g	3,40€ VAT incl
	Long 90° Elbow – 1/2″ SKU: MCFF0121112W1	72 × 72 × 29 mm	125,00 g	3,49€ VAT incl
	Long 90° Elbow – 3/4″ SKU: MCFF0121134W1	88 × 88 × 36 mm	220,00 g	5,39€ VAT incl
	Long 90° Elbow – 1″ SKU: MCFF0121144W1	118 × 118 × 53 mm	350,00 g	7,30€ VAT incl

Copyright 2026 MC Fact - All rights reserved