

90° Long-Radius Elbow MM

4,70€ – 9,99€ VAT incl

SKU: MCFF0121300W1

https://www.mc-fact.eu/en/shop/fittings/elbows/elbow-90-long-mm/

90° long-radius male-to-male elbow fitting made of black cast iron, available in 4 versions.




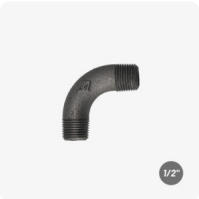





Features

Weight	N/A
Dimensions	N/A
Usage	Decoration, Plumbing
Thread type	BSPT Whitworth Conical
Size	3/8", 1/2", 3/4", 1"
Certified	DVGW, SVGW
Materials	Cast iron
range	Classic, Cast iron

Technical Drawing

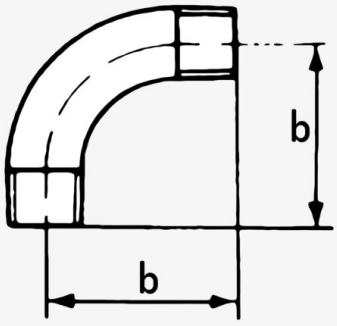

MC Fact (mm)	b
3/8" (12/17)	42
1/2" (15/21)	48
3/4" (20/27)	60
1" (26/34)	75

Copyright 2026 MC Fact - All rights reserved

	90° Long Elbow, Male/Male – 3/8″ SKU: MCFF0121338W1	51 × 51 × 17 mm	57,00 g	4,70€ VAT incl
	90° Long Elbow M/M – 1/2″ SKU: MCFF0121312W1	59 × 59 × 21,3 mm	88,00 g	5,90€ VAT incl
	90° Long Elbow, Male/Male – 3/4″ SKU: MCFF0121334W1	74 × 74 × 26,9 mm	160,00 g	6,90€ VAT incl
	90° Long Elbow, Male/Male – 1″ SKU: MCFF0121344W1	92 × 92 × 33,6 mm	264,00 g	9,99€ VAT incl

Copyright 2026 MC Fact - All rights reserved