







DIY E27 Metal Light Socket, Bare, Without Ferrule

5,60€ – 6,30€ VAT incl

SKU: MCFL0406000W8

https://www.mc-fact.eu/en/shop/lighting/lampholder-e14-metal-no-ferrule/

E14 DIY metal socket, bare, without ferrule or cable clamp. Ground connection provided. Available in several colors.

Features

Weight	30 g
Dimensions	28 × 28 × 58 mm
Finish	Copper, Brass, Chrome
Materials	Steel, Metal
Socket	E14
Size	M10
Thread type	NO End

Technical Drawing

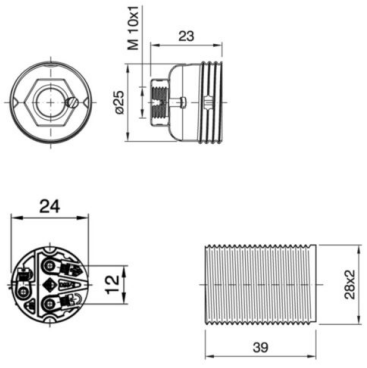

Copyright 2026 MC Fact - All rights reserved

	DIY E14 metal lampholder without ferrule - Chrome SKU: MCFL0406023W8	28 × 28 × 58 mm	30,00 g	5,60€ VAT incl
	Metal socket E14 DIY bare without ferrule - Copper SKU: MCFL0406020W8	28 × 28 × 58 mm	30,00 g	6,30€ VAT incl
	DIY E14 metal lampholder without ferrule - Brass SKU: MCFL0406024W8	28 × 28 × 58 mm	30,00 g	5,80€ VAT incl

Copyright 2026 MC Fact - All rights reserved