



Dimmer switch

36,00€ VAT incl

SKU: MCFL0220100Y3

https://www.mc-fact.eu/en/shop/lighting/switch-dimmer-for-lamp/

Dimmer switch for all types of light bulbs.
This switch stands out because it can be used with any type of 2- or 3-wire electrical cable—whether twisted or round—and also allows you to adjust the brightness of your light.

Features

Weight	37 g
Dimensions	97 × 30.5 × 28.5 mm
Type of connection	Screw terminal
Materials	Thermoplastic
Colors	Black, White
Nominal voltage	240V
Power Min	4W
Max Power	150W
Protection class	IP20
Switch type	Dimmer
Number of wires	2-wire, 3-wire

Technical Drawing

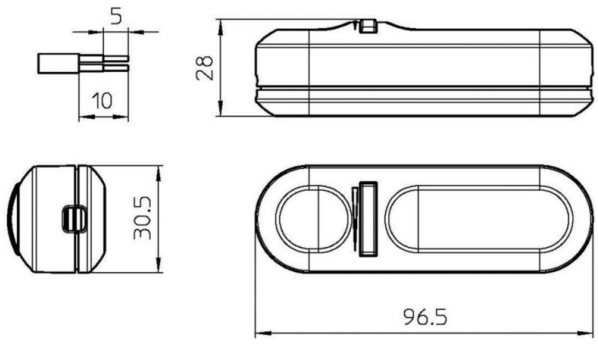

Copyright 2026 MC Fact - All rights reserved

	Dimmer Switch – Black SKU: MCFL0220101Y3	97 × 30,5 × 28,5 mm	37,00 g	36,00€ VAT incl
	Dimmer Switch – White SKU: MCFL0220102Y3	97 × 30,5 × 28,5 mm	37,00 g	36,00€ VAT incl

Copyright 2026 MC Fact - All rights reserved