







Short elbow 90° F/M

2,80€ – 6,20€ VAT incl

SKU: MCFF0111200W1

https://www.mc-fact.eu/en/shop/fittings/elbows/elbow-90-short-fm/

Short 90° male-female elbow fitting made of black cast iron, available in 4 versions.

Features

Weight	N/A
Dimensions	N/A
Use	Decoration, Plumbing
Type of thread	BSPT Whitworth Conical
Size	3/8", 1/2", 3/4", 1"
Certified	DVGW, SVGW
Materials	Cast iron
range	Classic, Cast iron

Technical Drawing

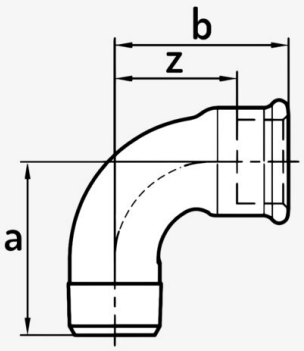

MC Fact (mm)	a	b	z
3/8" (12/17)	37	37	26
1/2" (15/21)	45	45	32
3/4" (20/27)	50	50	35
1" (26/34)	63	63	46

Copyright 2026 MC Fact - All rights reserved

	90° Short Elbow, F/M – 3/8″ SKU: MCFF0111238W1	50 × 45 × 25 mm	56,00 g	6,20€ VAT incl
	90° Short Elbow, F/M – 1/2″ SKU: MCFF0111212W1	61 × 56 × 29 mm	100,00 g	2,80€ VAT incl
	90° Short Elbow, F/M – 3/4″ SKU: MCFF0111234W1	70 × 64 × 36 mm	165,00 g	4,35€ VAT incl
	90° Short Elbow, F/M – 1″ SKU: MCFF0111244W1	85 × 80 × 43 mm	265,00 g	5,79€ VAT incl

Copyright 2026 MC Fact - All rights reserved